CASCADE-U 2D-200

CDT GmbH
Hans-Bunte-Straße 8-10
D - 69123 Heidelberg
www.n-cdt.com

The CASCADE-U neutron detector concept

The CASCADE neutron detector concept was adapted for the application as a UCN-detector (CASCADE-U). It is a GEM-based hybrid, solid converter gas detector for efficient and position sensitive detection of very- and ultra-cold neutrons. The detector concept is based on using a solid ^{10}B neutron converter layer in a common gas detector system, which guarantees sub-microsecond absolute time resolution and insensitivity to Gamma-rays. UCN-detection efficiency (meaning the probability that an incoming UCN will traverse the window and be detected) can thus be found more than 90%. GEM-technology (invented by CERN) provides inherently a rate capacity on the order of 10^7 n/cm^{2}s.

The detector has the conceptual advantage of insensitivity to magnetic fields, minimal sensitivity to thermal neutron- as well as gamma-background (always present at UCN-sources) and finally high robustness. The detector works with ordinary counting gases under normal pressure. This in turn allows to minimize detector window thickness. Cleaning by constant throughput of fresh counting gas avoids ageing effects, which guarantees long term stability and long lifetime of the detector.

Highly integrated ASIC-technology is used to realize hundreds of individual detection channels at non-proportional cost. The actual CASCADE-U detector design uses an ASIC electronic front-end paired with an adaptable integrated FPGA data processing unit to provide high rate capacity.

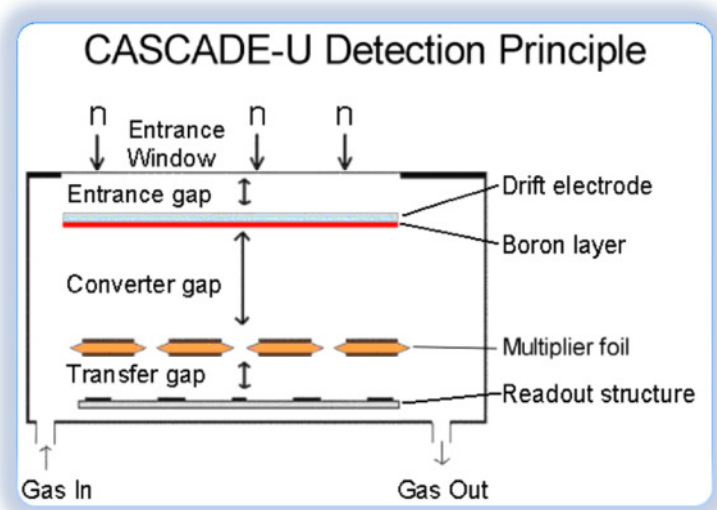

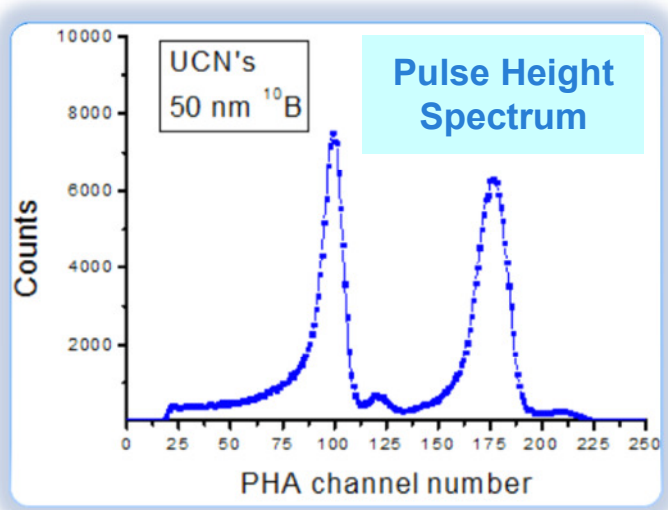

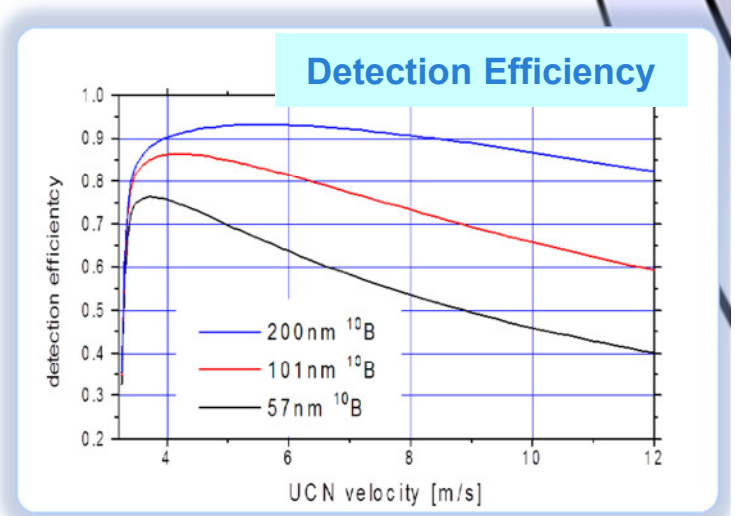

- **Very high efficiency** of more than 90% for ultra-cold neutrons (4 m/s) and very cold neutrons through entrance window coated with ^{10}B on inner side.
- **Position resolution** due to 1- or 2-dimensioal readout structure (customized solutions available).
- **High count rate capacity** of 10 MHz/cm^2 (10% dead time) due to the micro-structured GEM-foils. In combination with the ASIC/FPGA readout electronics count rate capability of up to 40 MHz.
- **Polarization analysis** through entrance window iron coated on outer side (tested successfully).
- **No γ-background:** Low Z converter material ^{10}B, the high energy of the α can easily be detected and small drift gaps amplify the enormous difference in ionization density, a fast electron from gamma interaction creates in the counting gas as opposed to an alpha particle from neutron conversion.
- **Long term stability** due to continuous purge of cheap counting gas through detector.

***"Startup of the high-intensity ultracold neutron source at the Paul Scherrer Institute"*, B. Lauss et. al., DOI 10.1007/s10751-012-0578-7**

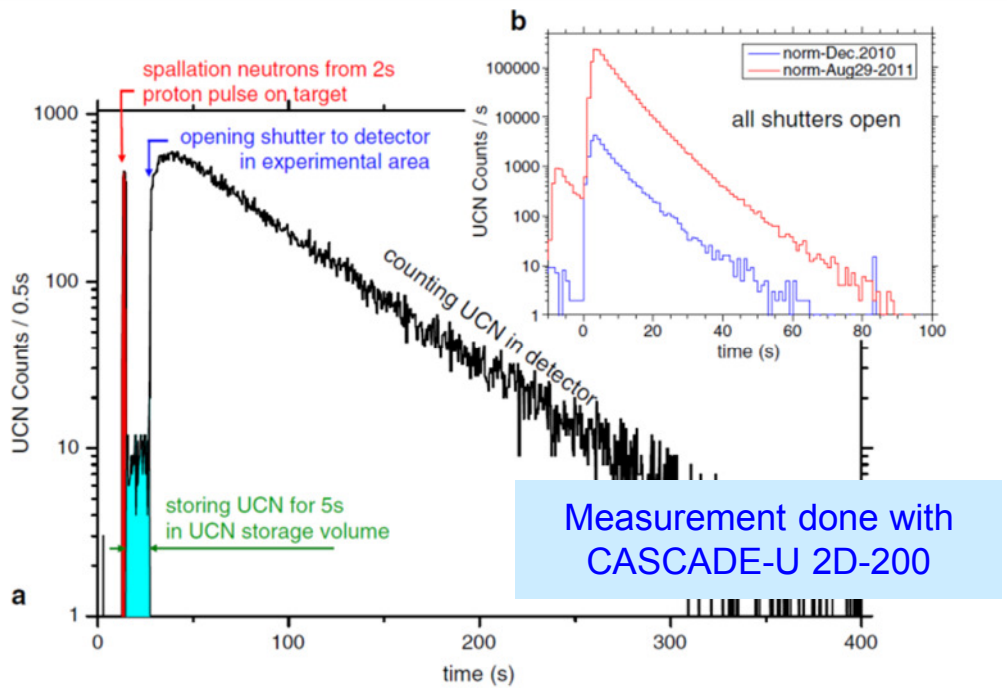

CASCADE-U detector types	
Part Name	**Technical Data**
1D-100	1D readout structure with size 100mm x 100mm structured in 64 strips with 1.56 mm pitch.
2D-100	2D readout structure with size 100mm x 100mm structured in 8x8 pixel with size of 12.5mm x 12.5mm.
1D-200	1D readout structure with size 200mm x 200mm structured in 128 strips with 1.56 mm pitch.
2D-200	2D readout structure with size 200mm x 200mm structured in 16x16 pixel with size of 12.5mm x 12.5mm.

Detector Housing CASCADE-U 2D-200

CDT GmbH
Hans-Bunte-Straße 8-10
D - 69123 Heidelberg
www.n-cdt.com

CASCADE-U 2D-200 detector system

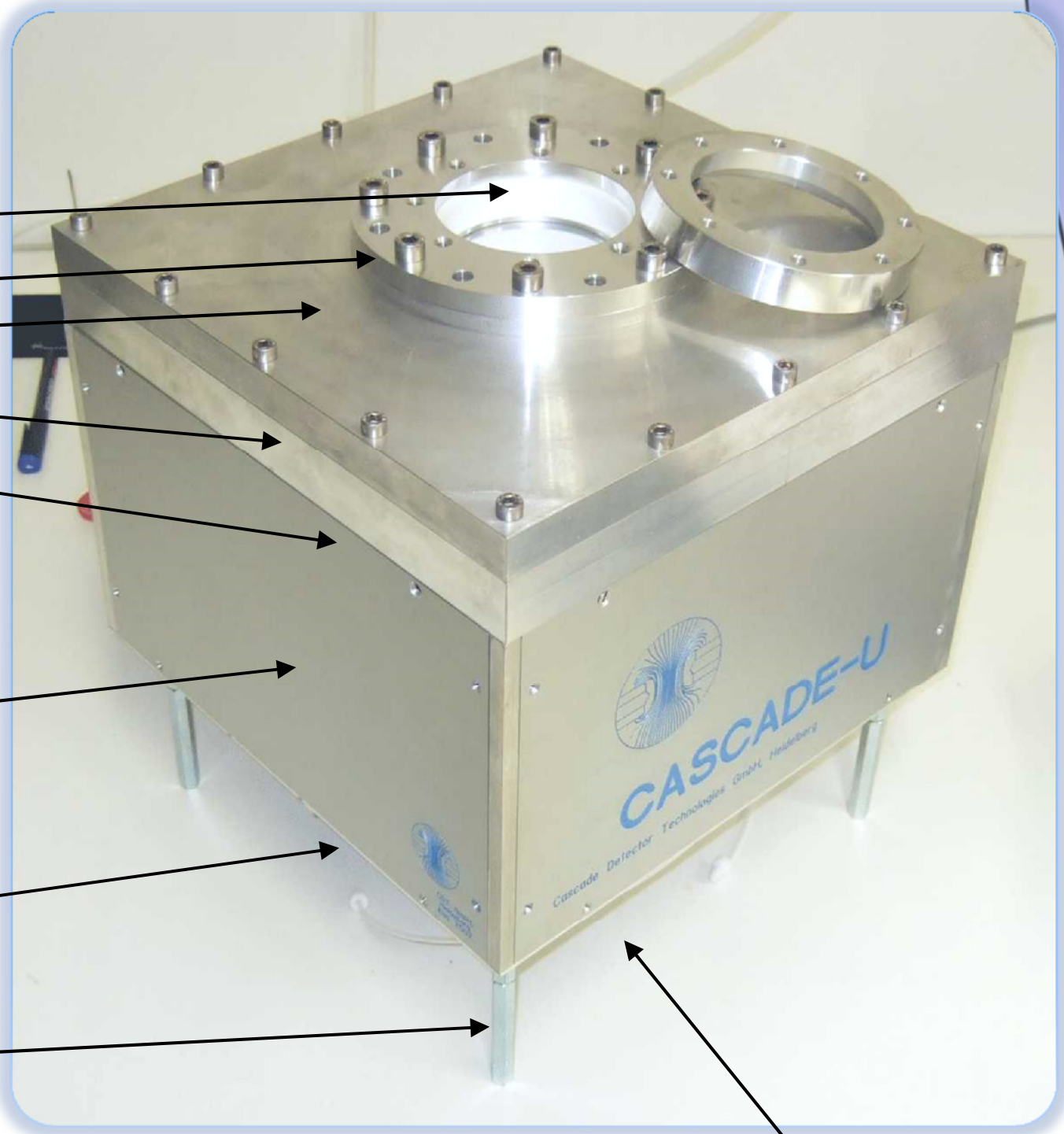

Teflon ring

Adapter to Wilson-flange

Top-flange

Sidewall-flange

Bottom-flange

(behind the shielding)

Shielding of the readout electronics

Gas In/Out
(on the bottom side)

Prop to hold the detector

HV In: SHV connector

Opt. Link

(all together on the bottom side)

A massive detector housing integrates the UCN detector front-end. It will accommodate the readout electronics on the backside as well. The housing consists of bottom-, sidewall- and top-flange, which are sealed with O-rings. The top-flange together with a special Wilson-flange are designed to accommodate the detector to the UCN beam pipe. A special ring made of Teflon insulates detector electrically from the beam pipe to reduce electromagnetic noise introduced by surrounding instrumentation like turbo-pumps and HF-generators.

The top- and the Wilson-flange are designed to hold a thin entrance window and to seal the detector against the vacuum of the UCN beam pipe. The entrance window can be removed easily.
The detector housing is designed to be operated with variable counting gas pressures between 0.1 bar and 1 bar absolute pressure, if the detector is connected to the evacuated UCN beam pipe.

Detector Housing CASCADE-U 2D-200

CDT GmbH
Hans-Bunte-Straße 8-10
D - 69123 Heidelberg
www.n-cdt.com

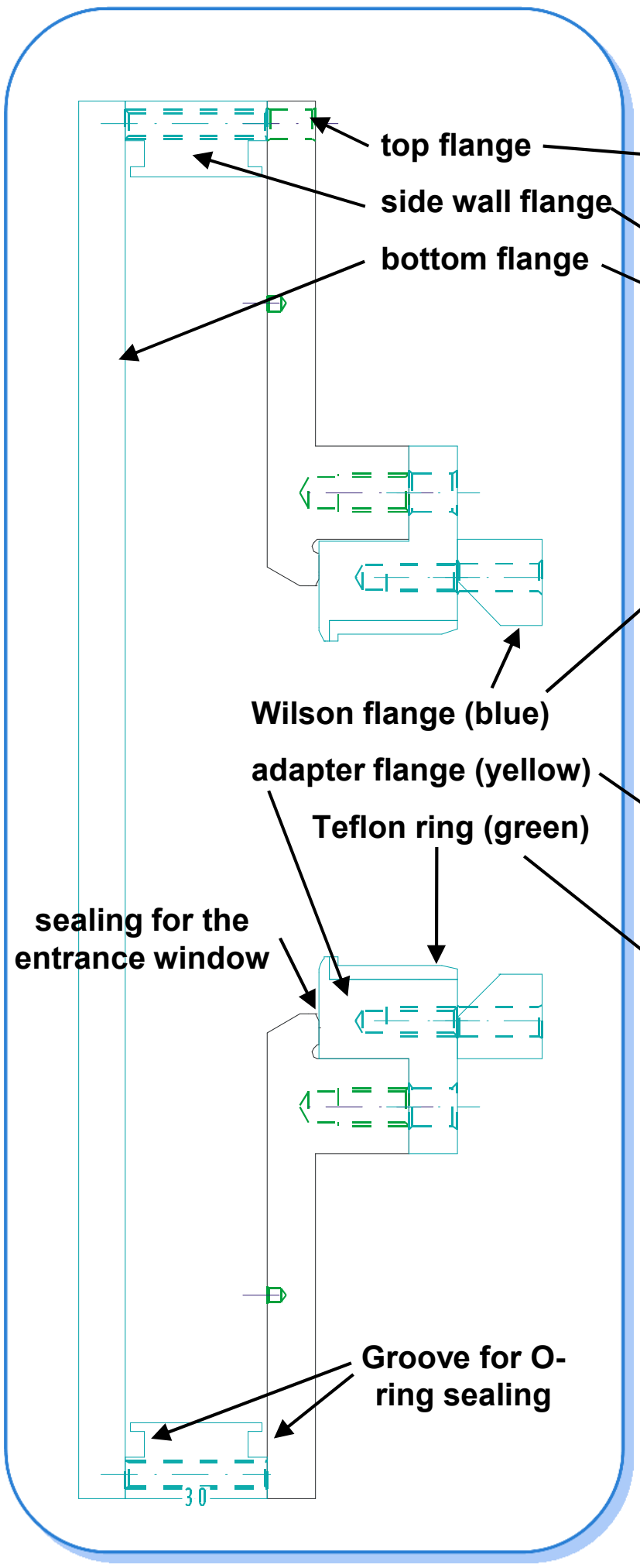

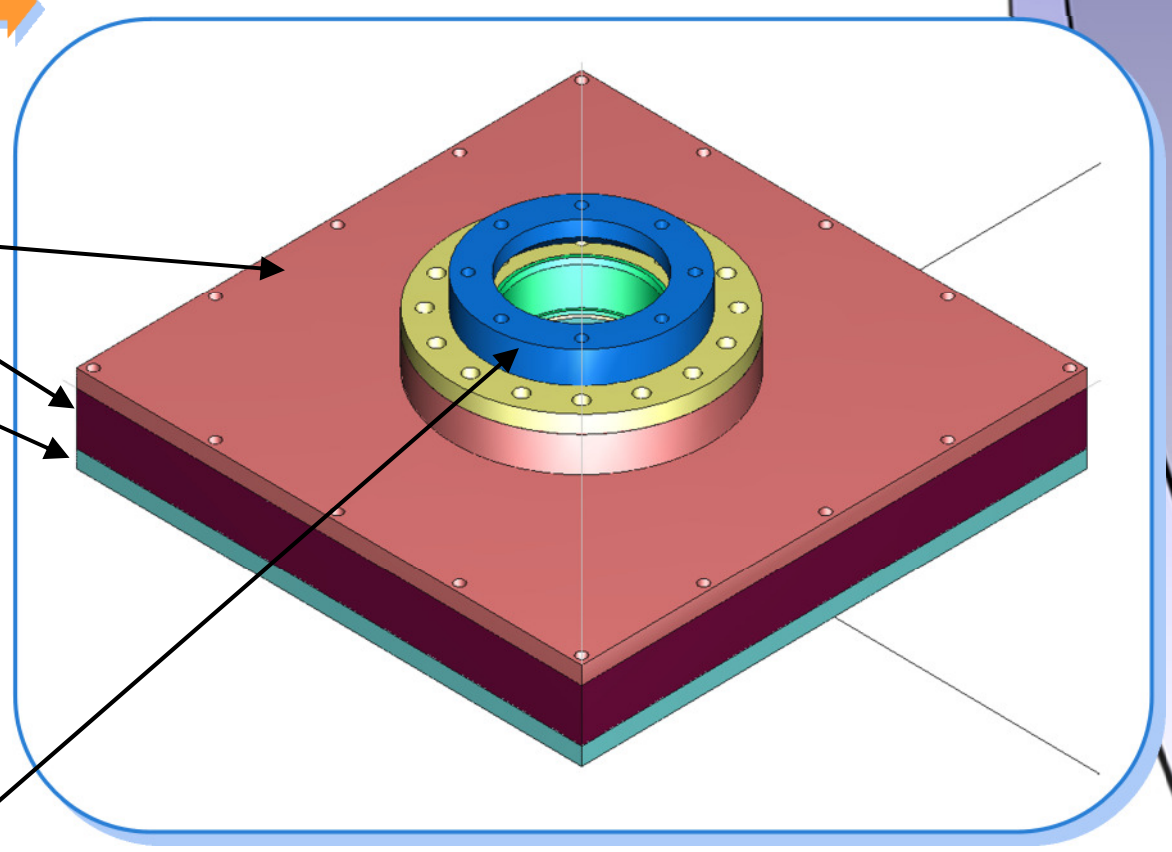

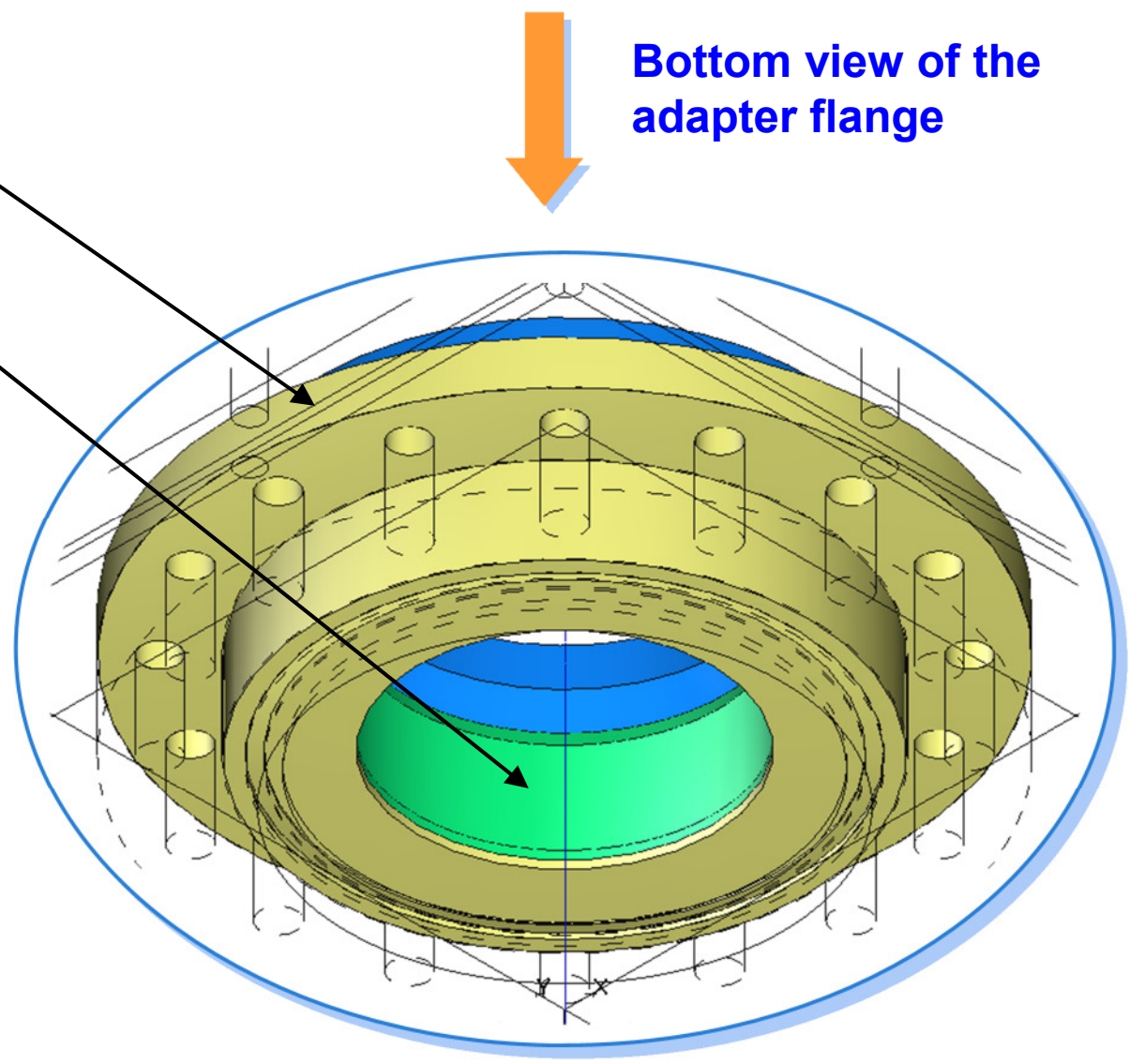

The latest development in respect to the detector housing results in an special adapter-flange. Now the top-flange together with such an adapter-flange and the Wilson-flange are used to accommodate the detector to the UCN beam pipe. The adapter-flange can now be exchanged very easily to mount the detector to any UCN beam pipe with diameters up to 160 mm or even more.

CDRS Readout System

CDT GmbH
Hans-Bunte-Straße 8-10
D - 69123 Heidelberg
www.n-cdt.com

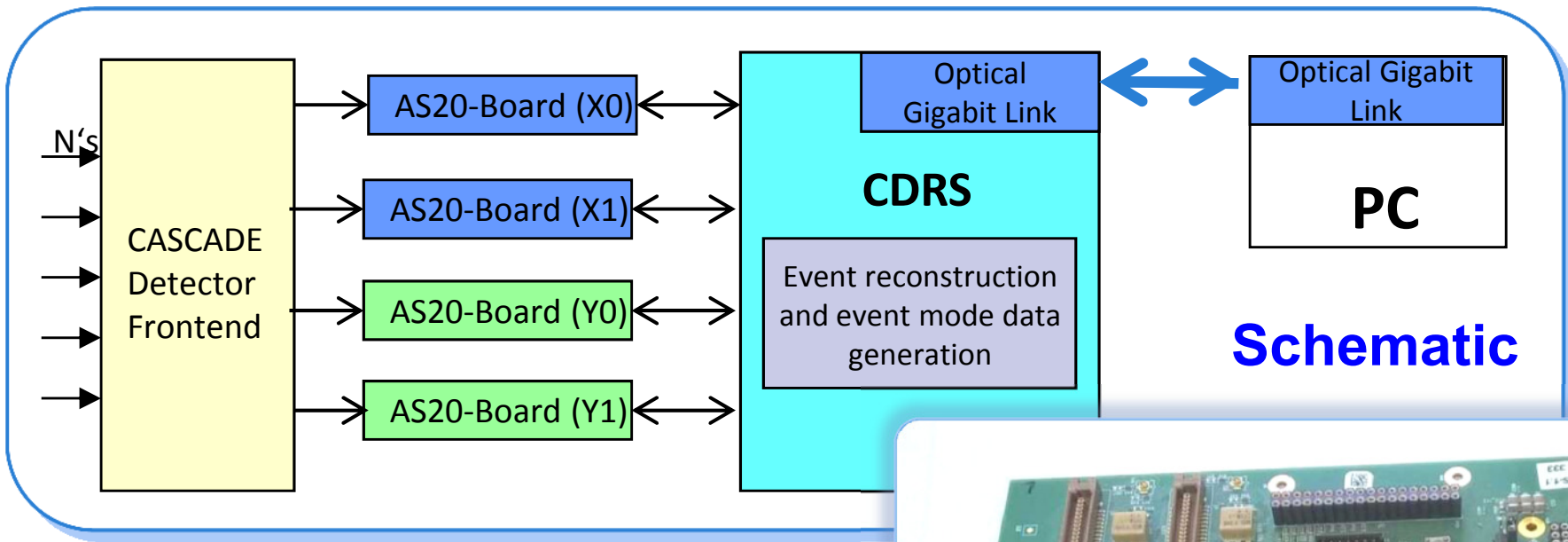

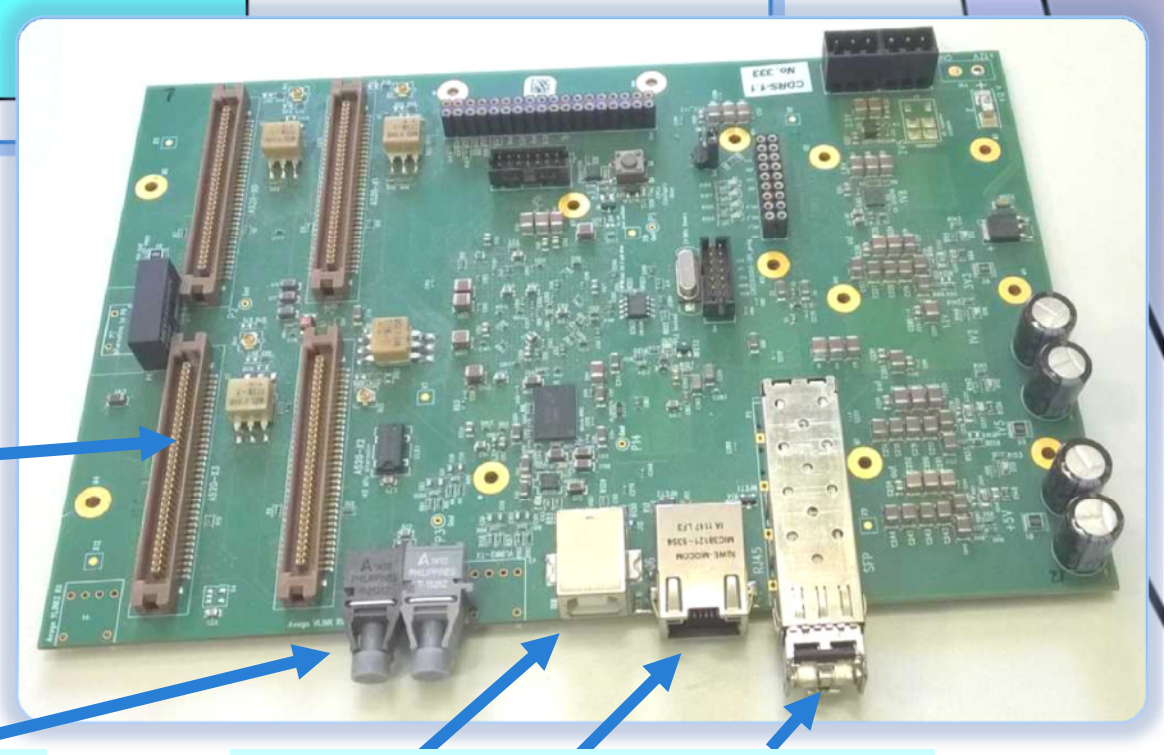

interface to 4 beam monitors (AS20B readout boards)

optical fast trigger/chopper IO (optical Avago connectors 50 MHz)

Interfaces
USB-2.0 LVDS opt. 2.5 Gbit link

The CASCADE Readout System CDRS is a modular FPGA-based readout for large, multi-unit as well as single-unit neutron detector systems. In combination with the ASIC based AS20 multi-channel front-end preamp, a position sensitive detector device may be read-out through a two dimensional signal coincidence concept. With each CDRS-board, up to 256 readout channels may be correlated to identify the incidence point of a neutron. The system concept is scalable, so that many CDRS systems may be operated synchronously to generate coherent event-mode neutron data to be transferred to the backend DAQ system. With such a system, synchronous time of flight measurements may be performed with a resolution down to 100ns and an asynchronism of less than 25ns. To this end, mechanisms are included that allow a full system of several hundred modules to synchronize to one common global clock as well as to distribute time-stamp synchronization signals as well as chopper start signals to all modules and local time-stamp counters.
CDRS may be employed to read out up to four individual position sensitive CASCADE beam monitors of 32 x 32 pixels each, one CASCADE 2D-200 GEM-based neutron detector of 128 x 128 pixels or one JALOUSIE volume detector element.
Furthermore, each AS20 front-end board transfers the analogue signal of one out of 64 pre-selectable channels. CDRS receives these signals and may perform a pulse height analysis through the on-board digitizing ADCs and respective pulse height extracting firmware. This feature may be employed for a detector diagnostic pulse height analysis.
Primary data readout and controls communication is realized through a Gbit optical link. Depending upon the data load expected, several modules are organized in a daisy chain on one optical link. Data is collected from different CDRS boards in a token ring scheme, where it is transferred block-wise in a just manner from individual CDRS elements, focusing readout bandwidth upon the location of data load appearance.

CDRS readout system	
Part Name	**Technical Data**
CDRS 1.1	FPGA parallel data processing unit Spartan 6 from Xilinx, eprom with operating firmware, JTAG programming interface, external power supply +7-24V
Interface	2 Gbit opt. link (token ring capable), USB 2.0, LVDS via CAT-cable
AS20 interface	interface to four AS20B-x preamp ASIC boards via LVDS
Digital-IO	2 Inputs and 2 Outputs Avago optical communicative channels of DC to 50 Mbit/s bandwidth, 2 Inputs and 3 Outputs (TTL) with Lemo connectors, I2C or SPI
PHA	ADC, 4 independent channels, 10bit, 40MHz

Several mechanisms have been foreseen to make this system robust, stable and serviceable.

- The controls accessibility through two different communicative channels as well as a local USB interface to each board.
- A cascaded clocking scheme where one exclusive, predefined oscillator determines the system clock, or, in case of momentary breakdown of this scheme, local subgroups synchronize to a common clock, or in an extreme case, a local clock at least allows maintaining a communicative channel so that remote measures may be taken to address the problems.
- Three different channels to realize firmware updates and thus allow for long term maintenance.

Pre-Amp ASIC Boards AS20

CDT GmbH
Hans-Bunte-Straße 8-10
D - 69123 Heidelberg
www.n-cdt.com

AS20-1

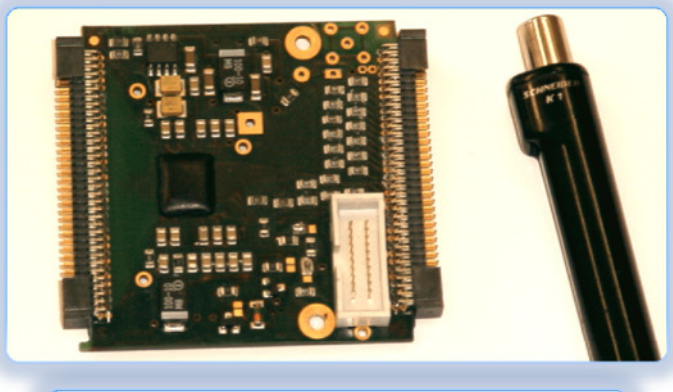

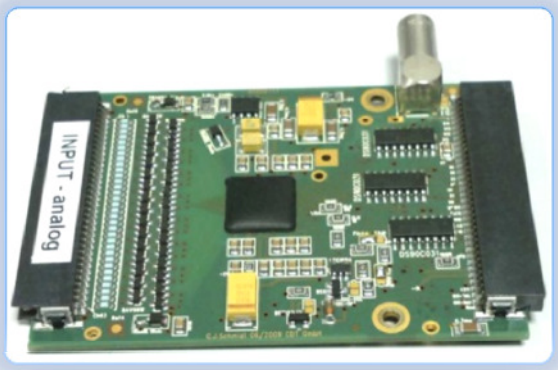

AS20B-1.1

AS20-3

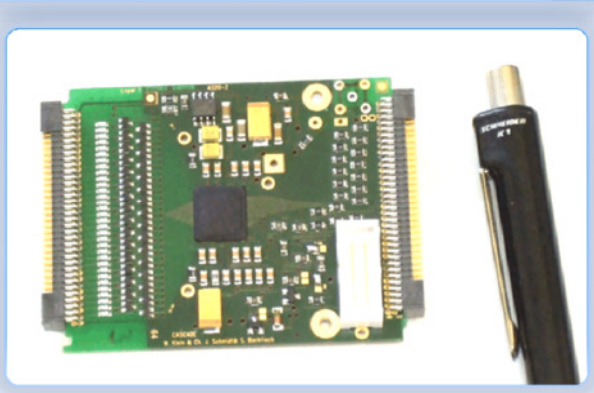

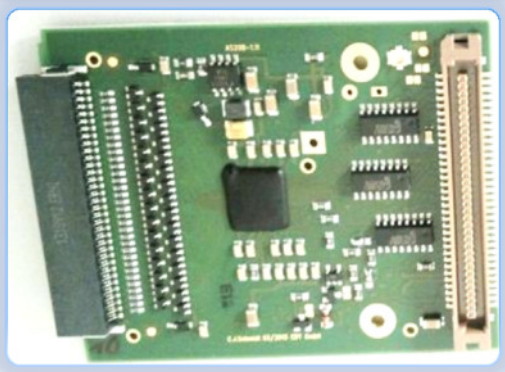

AS20B-1.11

Schematic of the preamplifier

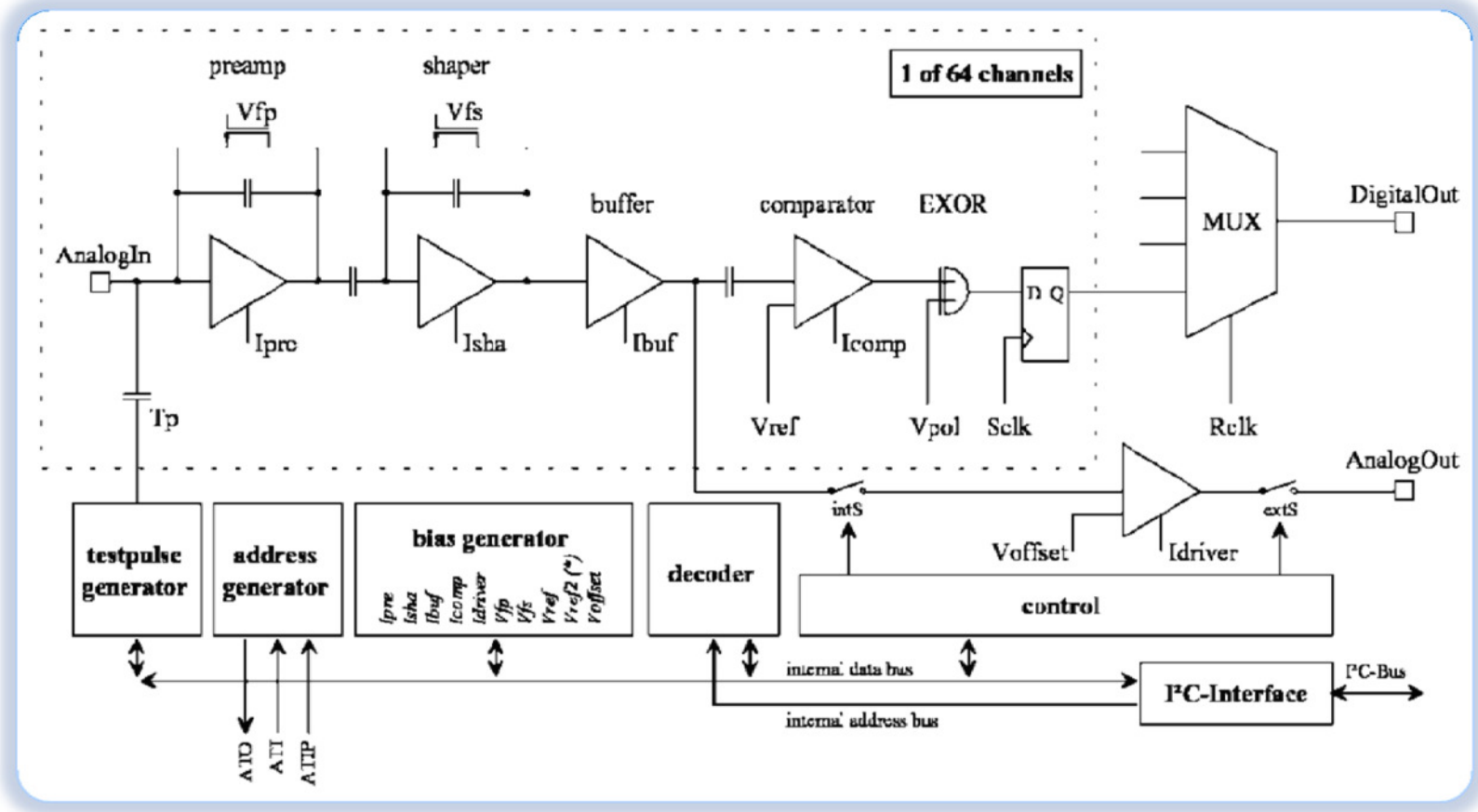

The highly integrated multi-channel analogue front-end electronics is based upon a CMOS preamplifier ASIC chip, with a prooven total ionising dose support of 1 kGy.

The board does come in four versions:

- A low noise version AS20-1 where protective circuitry is removed in order to achieve the best possible noise performance.
- A robust version AS20-3.1 with input protective circuitry in particular designed for gas detector applications. Noise may slightly higher.
- A robust version ASB20-1.1/1.11 with input protective circuitry (same as AS20-3) and differential interface (LVDS) for DigitalOut, which allows undistorted data transfer to any DAQ system over long distances.

AS20 preamplifier boards

Part Name	Technical Data
AS20-1 AS20-3.1 AS20B-1.1 AS20B-1.11	64 independent analogue input channels: low-noise charge sensitive preamplifier (2.9 mV/fC), shaper and discriminator, which accepts statistical data of 330 kHz at 10% dead time, discrimination of positive or negative signals, discrimination threshold from –200 mV up to 200 mV programmable via I^2C-interface, one analogue output of one channel can be chosen free for PHA and monitoring purposes at once, internal clock 10 MHz (Sclk), output signal 4-fold multiplexed TTL at 40 MHz (Rclk), power requirements ±5 V, 200 mA each, analogue output connector Lemo, total ionising dose support of 1 kGy.
AS20-1 AS20-3 .1	I/O connectors dual inline 70 pin (Samtec) and connector for daisy chain with 20 pin
AS20B-1.1	I/O connectors dual inline 68 pin (ERNI).
AS20B-1.11	I/O connectors dual inline 68 pin (input ERNI, output KEL).

CDT Detector Control

CDT GmbH
Hans-Bunte-Straße 8-10
D - 69123 Heidelberg
www.n-cdt.com

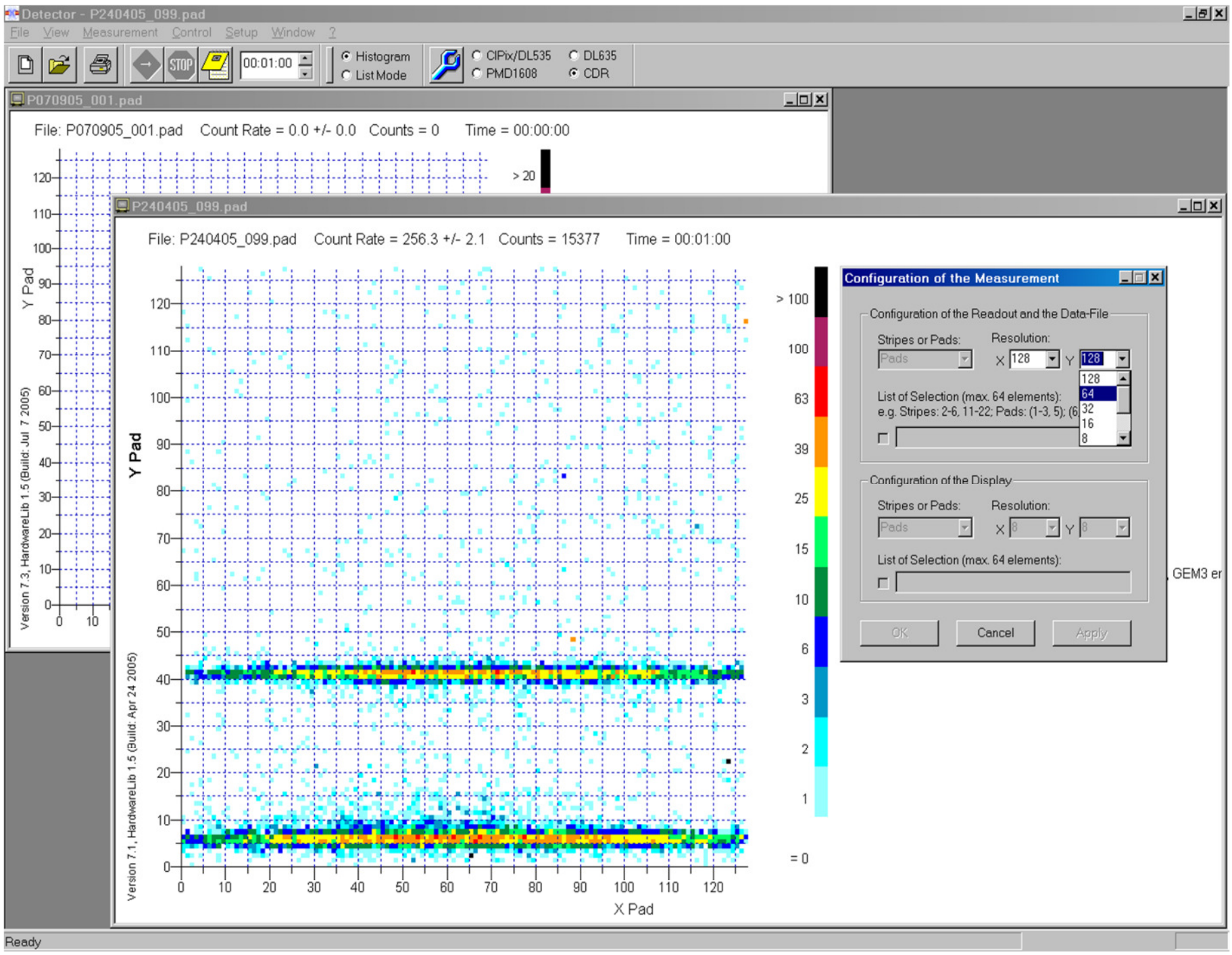

Windows based software package "CDT Detector Control" allows stand-alone operation of CDR systems from a PC or Laptop via optical link. It supports easy configuration of a CASCADE detector system, starting and ending data acquisition as well as data download and event display. The program itself is held in the typical Windows-style. Various types of measurements (e.g. 2D-readout, TOF-spectra or pulse height spectra) can be configured individually in a self-explanatory way.

Software drivers allow integration of the CDRS system into already existing instrument control under Windows (XP/Win7/Win10) and Linux. Support for high level programming under C++ is provided with the CASCADE Hardware Library, which supplies routines for configuration and measurement of the CDRS board respective the AS20 readout boards.